DESIGN SPECIFICATIONS

	CHANNEL 1	CHANNEL 2
FREQUENCY (GHz):	5.4-5.9	5.4-5.9
VSWR (max):	1.15:1	1.15:1
INSERTION LOSS (max):	.15dB	.50dB
PEAK POWER (max):	1000 kW	100 W
AVERAGE POWER (max):	1 kW	100 W
ISOLATION:	---------- 70 dB ----------	

ROTATIONAL SPEED: 15 RPM max
PRESSURE (max): 25 psig
STARTING TORQUE (max): 6 in-lb
LEAK (max): 1 cu in./min
TEMPEARATURE (OPER): -20˚C to +60˚C
TEMPEARATURE (NON-OPER): -45˚C to +60˚C
WEIGHT (nom): 5.5 lbs
MATERIAL: ALUMINUM ALLOY
FINISH: TBD
MARKING: DIAMOND STD LABLEL PER MIL-STD-130,
TO INCLUDE PART NO., SER NO. & DATE OF MFG.

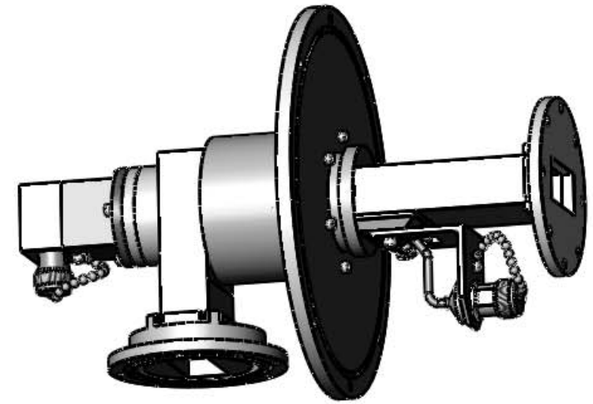

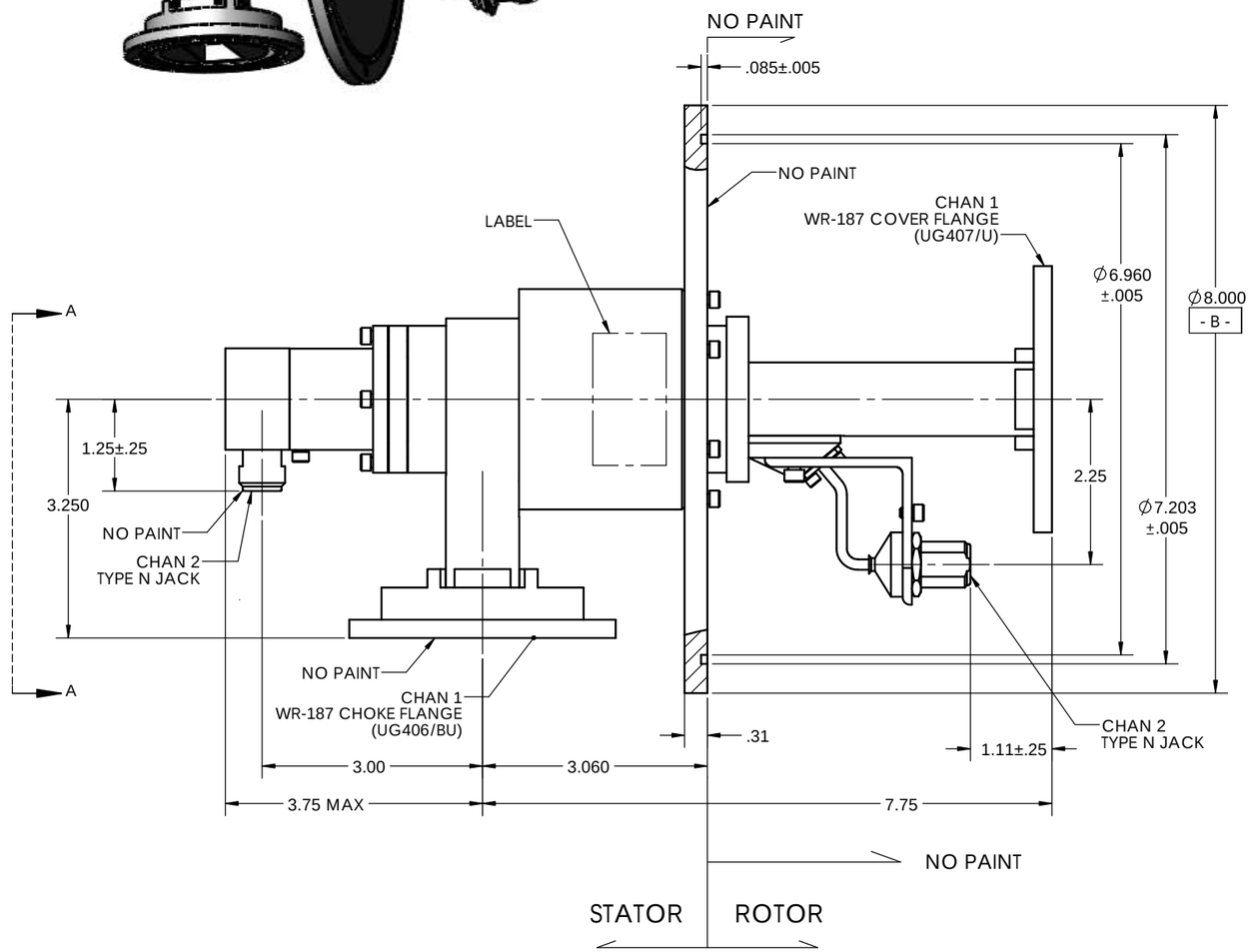

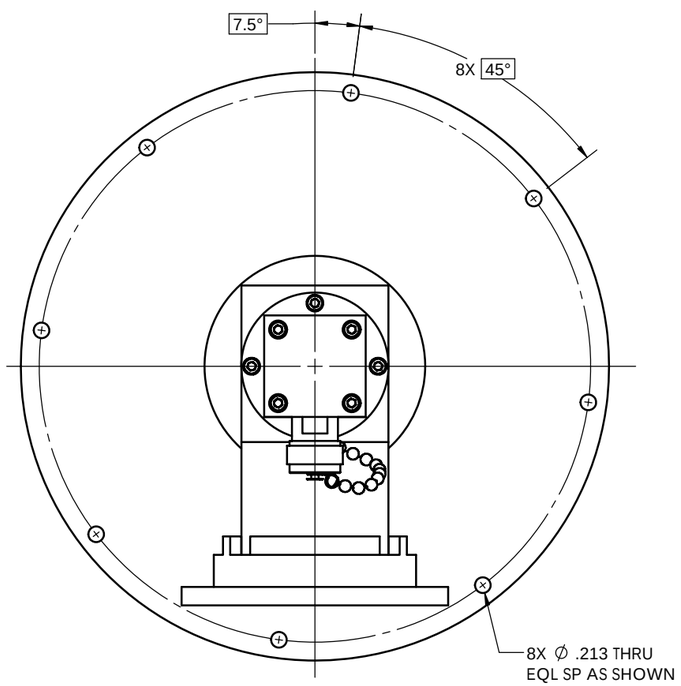

VIEW A-A

THIRD ANGLE PROJECTION

DIMENSIONS ARE IN INCHES. REMOVE ALL BURRS AND SHARP EDGES .005 MAX, UNLESS OTHERWISE SPECIFIED, SURF FINISH 63
TOLERANCES ARE:
FRACTIONS ±1/64 | DECIMALS 2 PLACES ±.03, 3 PLACES ±.010 | ANGLES ±1/2°

INTERPRET DIMENSIONS & TOLERANCES PER ASME Y14.5M

DIAMOND ANTENNA & MICROWAVE CORP
LITTLETON, MA 01460

TITLE: WR-187 DUAL CHANNEL ROTARY JOINT

SIZE:	CAGE CODE:	DRAWING NUMBER:
C	01882	CAT 22140-0

SCALE 3:4 | WEIGHT (EST.): | SHEET 1 OF 1