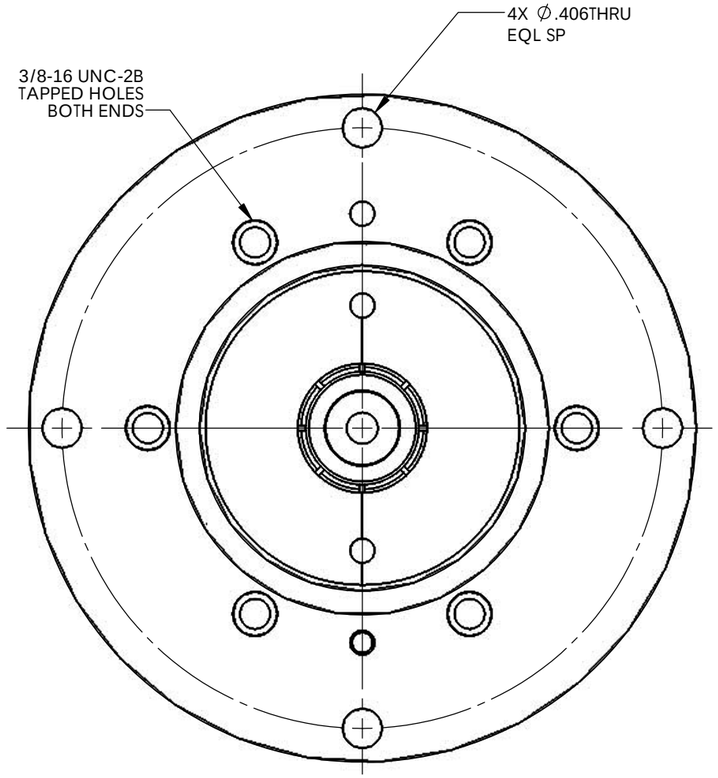

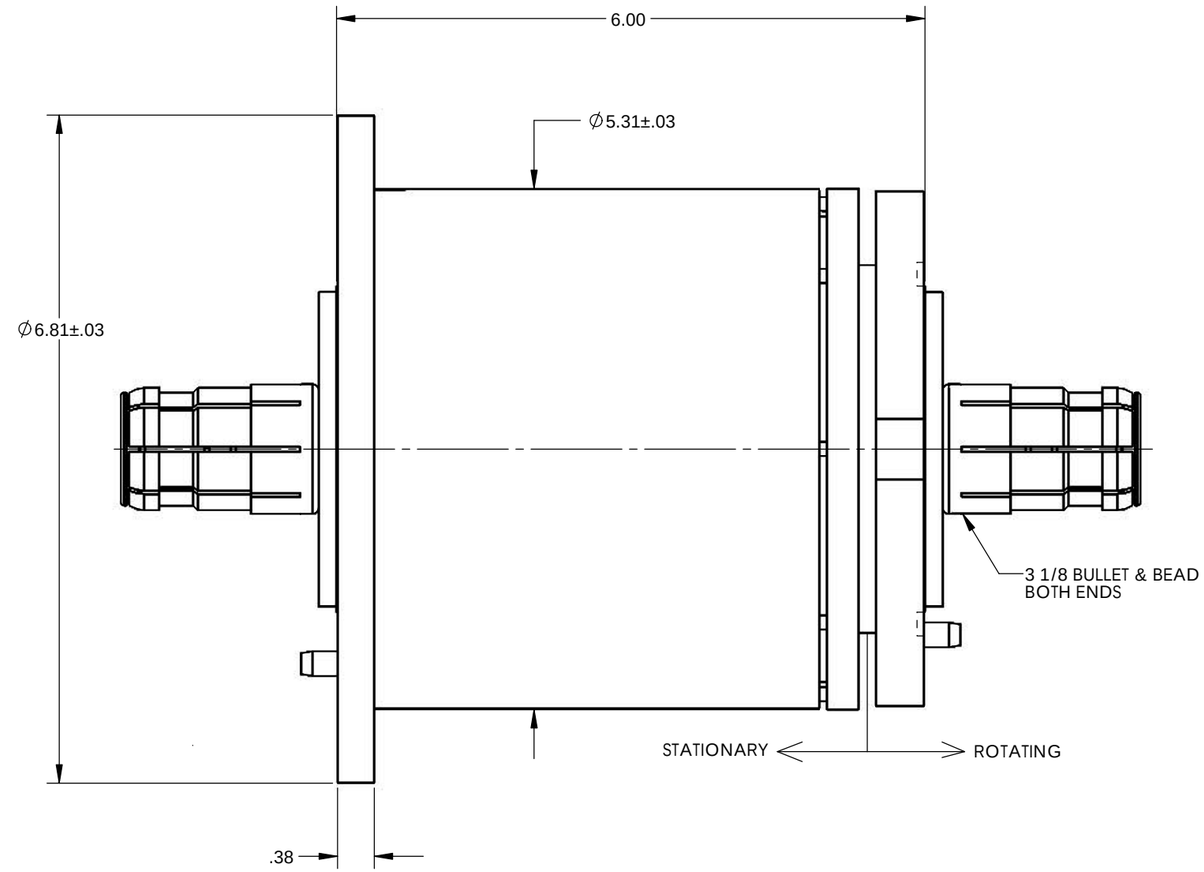

DESIGN SPECIFICATIONS

ROTARY JOINT.....INLINE
FREQUENCY.....DC TO 1500 MHz
VSWR, MAX.....1.10
INSERTION LOSS.....0.1 dB
INSERTION LOSS WOW..... 0.05 dB MAX/360°
VSWR WOW.....0.02 MAX/360°
POWER, PEAK, UNPRESSURIZED....1.5 MW NOMINAL
POWER, AVERAGE.....50 KW NOMINAL TO 50 MHz
25 KW NOMINAL TO 250 MHz
15 KW NOMINAL TO 1500 MHz
WEATHERIZED.....YES
PRESSURIZED.....30 PSIG NOMINAL
LEAKAGE RATE.....5.0 cu.cm/min MAX
STARTING TORQUE.....3 FT-LBS NOMINAL
COAXIAL LINE IMPEDENCE.....50 OHMS
ROTATIONAL SPEED.....100 RPM NOMINAL
MATERIAL.....ALUMINUM
FINISH.....IRIDITE
ENVIRONMENTAL MINIMUM
REQUIREMENT.....MIL-E-5272
WEIGHT.....11 LBS

THIRD ANGLE PROJECTION	DIAMOND ANTENNA & MICROWAVE CORP LITTLETON, MA 01460		
DIMENSIONS ARE IN INCHES. REMOVE ALL BURRS AND SHARP EDGES .005 MAX, UNLESS OTHERWISE SPECIFIED, SURF FINISH 63 TOLERANCES ARE: FRACTIONS ±1/64 DECIMALS 2 PLACES ±.03 3 PLACES ±.010 ANGLES ±1/2°	TITLE: ROTARY JOINT, COAX, 3 1/8 EIA		
	SIZE: C	CAGE CODE: 01882	DRAWING NUMBER: CAT 30-2048-0
INTERPRET DIMENSIONS & TOLERANCES PER ASME Y14.5M	SCALE 1:1	WEIGHT (EST.):	SHEET 1 OF 1